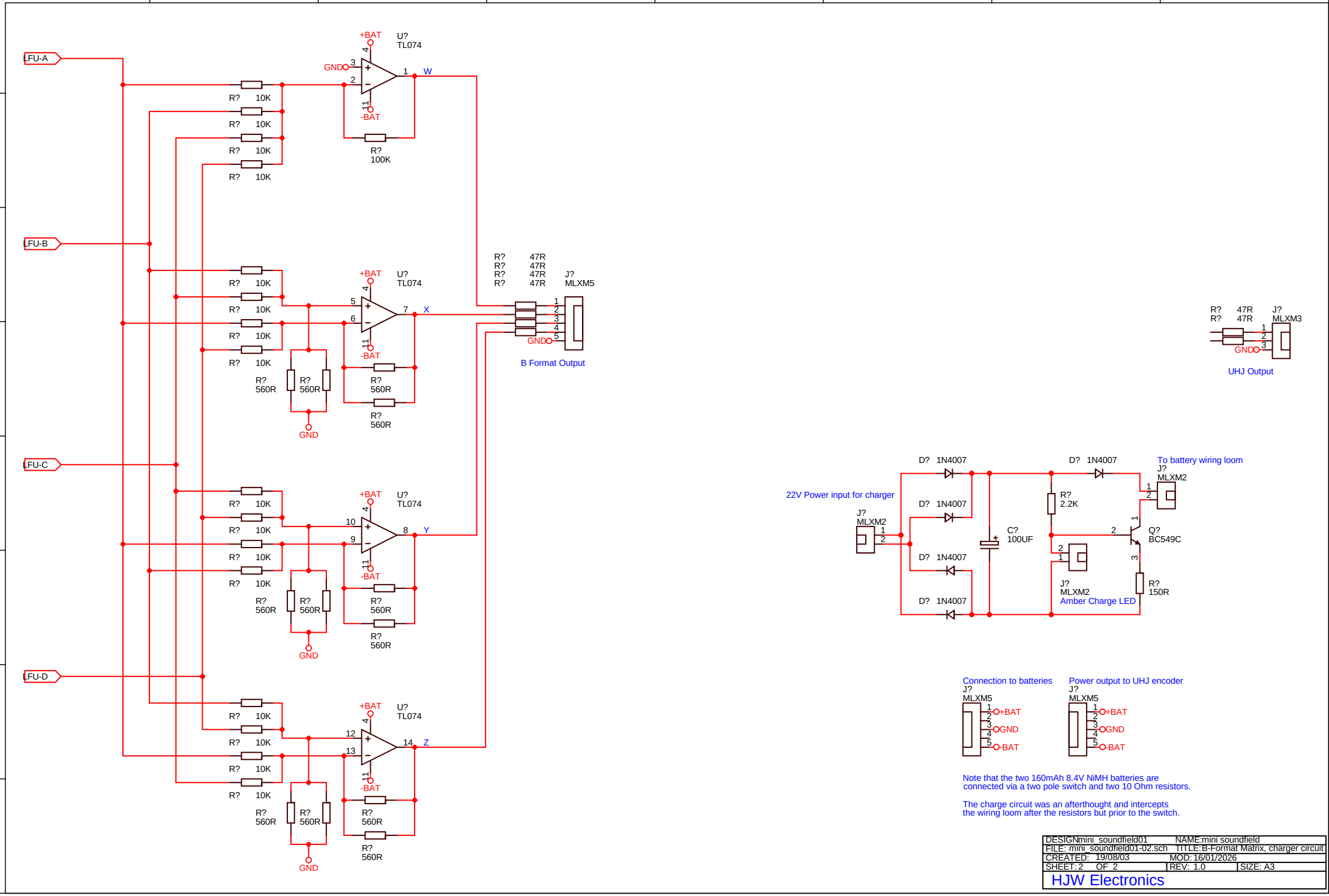
LFU-A
LFU-B
LFU-C
LFU-D
U? TL074
+BAT
-BAT
GND
W
X
Y
Z
R? 10K
R? 100K
R? 560R
R? 47R
J? MLXM5
B Format Output
J? MLXM3
UHJ Output
D? 1N4007
22V Power input for charger
J? MLXM2
C? 100UF
R? 2.2K
R? 150R
Q? BC549C
To battery wiring loom
Amber Charge LED
Connection to batteries
Power output to UHJ encoder
Note that the two 160mAh 8.4V NiMH batteries are connected via a two pole switch and two 10 Ohm resistors.
The charge circuit was an afterthought and intercepts the wiring loom after the resistors but prior to the switch.
DESIGN:mini_soundfield01 NAME:mini soundfield
FILE: mini_soundfield01-02.sch TITLE:B-Format Matrix, charger circuit
CREATED: 19/08/03 MOD: 16/01/2026
SHEET: 2 OF 2 REV: 1.0 SIZE: A3
HJW Electronics