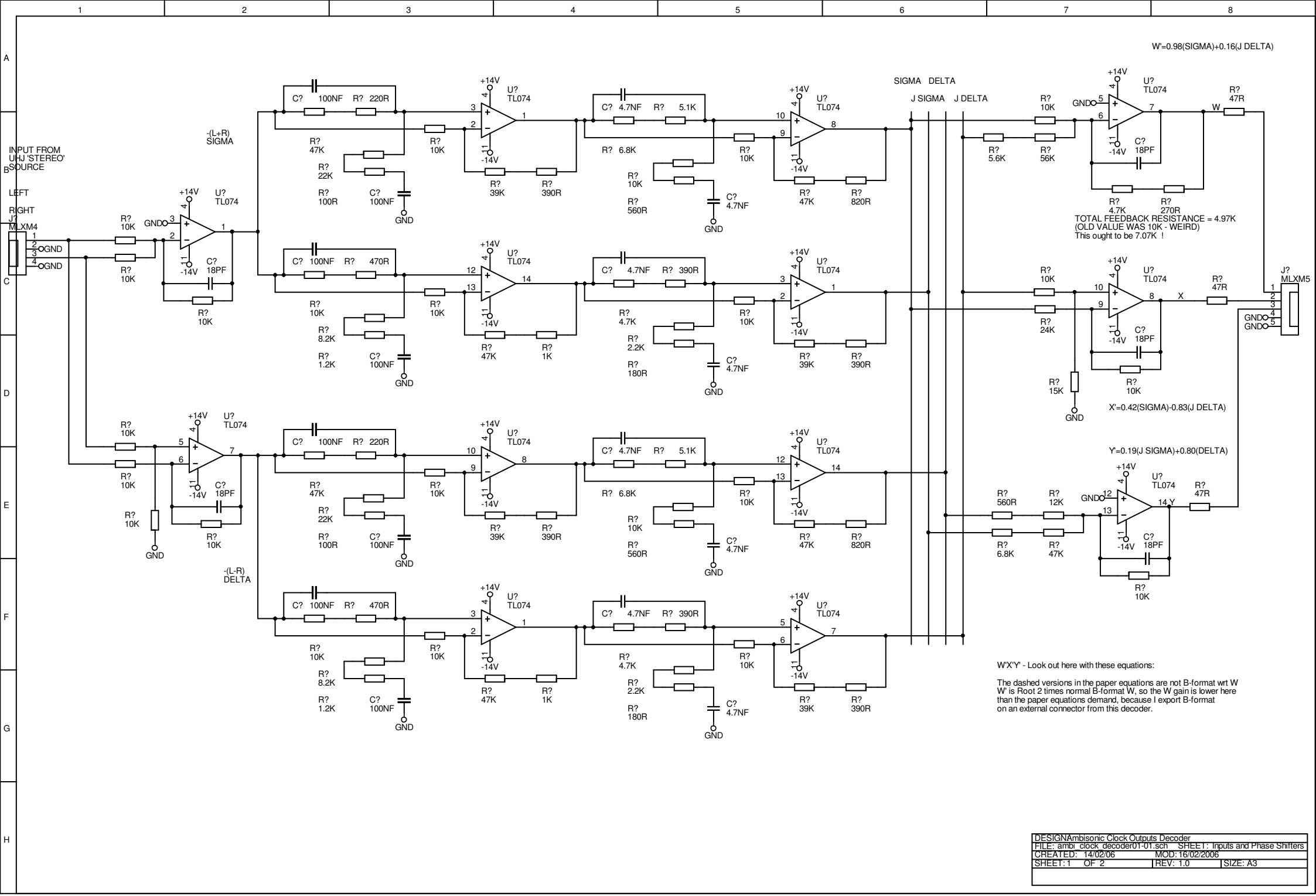

DESIGNAmbisonic Clock Outputs Decoder		
FILE: ambi_clock_decoder01-01.sch	SHEET: Inputs and Phase Shifters	
CREATED: 14/02/06	MOD: 16/02/2006	
SHEET: 1 OF 2	REV: 1.0	SIZE: A3